Vanity Tops and Units

Manufactured from 1.2mm thick grade 304, satin polished stainless steel with 300mm diameter bowls, supplied with **W1130** 32mm waste and plug (no overflow) or **W1132** 32mm waste, plug and overflow assembly, tapholes as required. Units are supplied with 30mm square tubular, grade 430 stainless steel stand and adjustable feet.
- Available in any length, up to 2875mm, allowing approximately 600mm per person.
- Tapholes as required.

Vanity Tops
V1291T - with one bowl (600mm wide)
V1292T - with two bowls (1200mm wide)
V1293T - with three bowls (1800mm wide)
V1294T - with four bowls (2400mm wide)

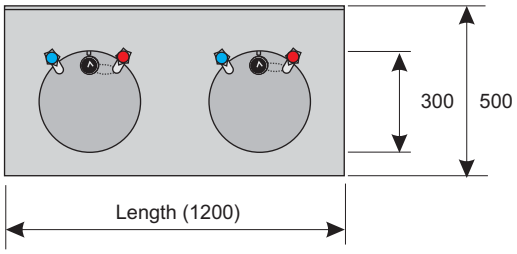

Vanity Units
V1291 - with one bowl (600mm wide)
V1292 - with two bowls (1200mm wide)
V1293 - with three bowls (1800mm wide)
V1294 - with four bowls (2400mm wide)

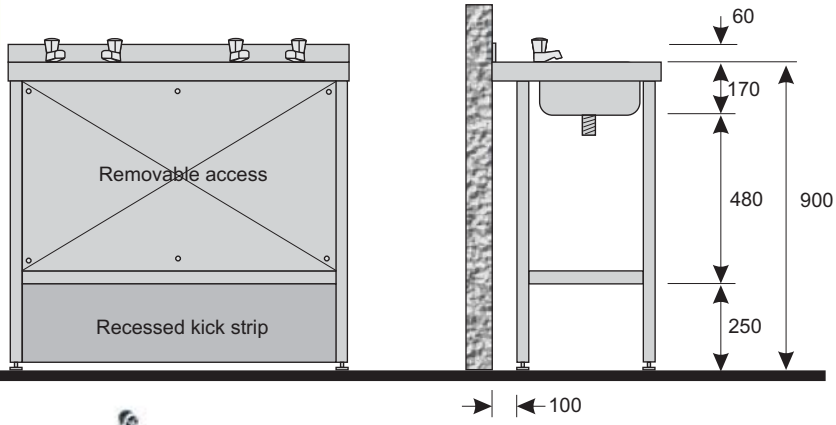

Options

W1130 - CP plastic waste & plug 32mm dia.

W1132 - CP plastic waste, plug & overflow assembly 32mm dia.

L1799 - Pair of stainless steel leg supports

General Information

Material Specification

All our standard products are manufactured from grade 304 or grade 430 stainless steel to European Standard EN 10088-2, which is suitable for general use in toilets, washrooms and kitchens, within a normal working environment.

If equipment is to be regularly used for any other purpose, or under abnormal atmospheric conditions, eg. swimming pool, marine, laboratory use etc. grade 316 stainless steel may be more suitable, as it offers greater resistance to corrosive attack from chlorinated water in high ambient humidity, salt and other chemicals.

All grades of stainless steel are affected by a few specific chemicals and acids, so please contact the sales office for advice, if you are unsure of its suitability.

Installation Advice

Stainless steel fixings should always be used, especially under wet or humid conditions.

If strong acid solutions used for cleaning tiles or masonry, come into contact with stainless steel, rinse off thoroughly with clean water and wipe dry. Hydrochloric or sulphuric acid will attack stainless steel.

Plain carbon steel nails, screws, paint tins, grinding swarf, wire wool etc., left on stainless steel will rust and discolour the surface, giving the impression that the stainless steel is rusting.

Upon completion of installation, remove any debris and clean thoroughly, as recommended in Care and Maintenance.

Automatic Cistern Advice

When installing an automatic cistern, you must ensure that the fixing height is between 1800 and 2000mm to the underside of the cistern, ensuring that the downpipe goes no further than 20mm into the siphon tail.

If the downpipe has been pushed too far into the siphon, it will result in the cistern continuously flushing or dribbling. To remedy this problem, you must either raise the cistern or shorten the downpipe.

An airlock in the siphon can cause the same problem. A quick fill by fully opening the petcock, usually works.

Care and Maintenance

Stainless steel should be cleaned with soap or mild detergent and water, using a sponge or cloth, then rinsed with clean water and wiped dry.

If stubborn marks or deposits are allowed to form, use a cream cleaner that is suitable for stainless steel and, if necessary, a nylon pad or brush.

Regular manual cleaning, once a week, should avoid any problems.

Warning

If the correct grade of stainless steel is used for its intended purpose, within the correct environment and cleaned correctly, it will not rust or stain and will maintain its original appearance for many years.

If it is not cleaned regularly, dirt and other deposits can build up and discolour the surface of stainless steel and will often resemble rust. However, stubborn marks and deposits can be removed. See Care and Maintenance.

Only use cleaning solutions clearly recommended for use with stainless steel. If in doubt, do not use.

If any liquid containing bleach (sodium hypochlorite) is used on, or accidentally splashed on, stainless steel, a chemical reaction can occur. If it is not rinsed off with clean water and wiped dry, within a few minutes, this reaction causes pitting corrosion of the surface and subsequently rust, which is irreparable..